Car Rider Pickup System for Schools

Haya Abusada, Jake Hewett, Jayden Pearson, Jack Uehlinger, Sara Vorhaben

The Wranglers

Problem Background

- Over 70% of students are now picked up via car, creating massive congestion.
- Parents wait up to 1 hour, with lines often forming 1-2 hours before dismissal.
- Queues spill onto local highways, causing traffic backups and increasing accident risks.
- Inclement weather increases delays as bus and bike riders often switch to the car line.
- The manual process requires 5-10 staff members daily, diverting them from educational duties.

Problem - Needs Statement

School pickup via the car rider line has been increasing in the US over the years leading to an increase in line length and pickup time. Now, over 70% of students are picked up from school via the car rider line. Car rider lines have become congested, posing a safety issue for both the students and other drivers. With more students attending school, car rider lines have become too slow and cause parents to wait up to over an hour in line leading to frustration. Some studies show that the car rider pick-up line starts to form 1-2 hours before school actually gets out, which leads to traffic backing up local highways and streets, and even frequent accidents. Inclement weather further slows the line, as students who ride the bus or bike to school will often be picked up by their parents in the car rider line to avoid the weather. Additionally, 5-10 staff members are required to set up and run the pickup process, diverting their time away from the education of students. An automated system is needed to streamline the pick-up process to decrease delays and safety issues.

Goal and Objectives

Goal

The goal of this project is to design and prototype a system that will help automate the car rider pick up process at schools. The system is built to reduce the amount of time necessary to pick up students from school.

Objectives

- The system will allow parents to update their information (license plate numbers, approved adults for pickup, car rider schedules) via a website with approval from a staff member of the school.
- The system will read the marker on the car (license plate, QR code, nametag) as it enters the pickup line and send the information to a server.
- The server will identify the parent and child associated with the car marker, and update a display at the entrance of the pickup line to direct the car to the proper station.
- The laptop at the front of the school is updated to inform the students and staff which child is being picked up, and which zone to go to.

Goal and Objectives - Requirements

Marketing Requirements

1. Make the pickup process faster for parents
2. The system should be easily updated
3. The system should be low cost
4. The system should be easy to use/install
5. Information must be validated if updated or inserted
6. Student safety should be ensured (information, physical, etc.)
7. The system should be reliable

Goal and Objectives - Requirements

Marketing Requirements	Engineering Requirements	How Requirement was met
1	Pickup time should be reduced by 30% per 100 kids. The time from the car entering the view of the camera to information being displayed should be no more than 5 seconds.	display updates <1 second
4	7 inch (diagonal) display screen to give station and process instructions clearly.	See Setup
1, 6	Per Texas Family Code, ensure that students are referred to authorized parents 100% of the time.	Scanned QR code only works for approved users
6	Private Information stored in the database should be encrypted using 128 bit encryption.	Database automatically encrypts
1,6,7	Should correctly identify/assign parents to kids 100% of the time.	See Full System Test
3	The costs for developing the system should not exceed $300.	See Budget
2,4,5	The system should allow parents to submit a request to the school to update information and the school should receive the request all within 1 minute.	Aproval requests can be seen in system in <1 second

Goal and Objectives - Requirements

Marketing Requirements	Engineering Requirements	How Requirement was met
4	The system should have a modular design such that failed components can be replaced by a technician in under 15 minutes.	System designed so each system component could easily be replaced if broken
7	The software will comply with the Digital Millennium Copyright Act.	No code was copied from existing sites
2,4,5,6	Staff should be able to access databases with provided credentials and view all parent to children links.	See staff portal
1	Minimum 40inch (diagonal) display screen to give station and process instructions clearly inside in the pickup .	See System Setup: display Student Pickup screen inside on TV/Smartboard in classroom
4,7	The system should be mounted correctly on a tripod to ensure stability and prevent hazards.	See Car Entrance Model Setup.

Design Constraints and Feasibility

Technical and Temporal Constraints

- Maximum of 5 seconds from image capture to display update
- Identification accuracy must be 100% to ensure safety and efficiency
- Connection between the system parts must be reliable

Physical and Environmental

- Needs to withstand outdoor elements (wind and rain)
- Needs to be portable and stable with modular parts, mounting, and power supply to reduce system downtime and speed up repair and maintenance

Economic

- Must cost $250 or less, necessitating cost-effective components

Feasibility

- Core technology, such as Python image processing and Wi-Fi, is well documented and achievable
- Main challenge will be creating a fast and efficient system within our budget

Design Alternatives and Rationale

Solution	Pros	Cons
Manual Pickup App (PikMyKid)	Easy to implement; low cost; reduces paperwork	Requires staff queue management; no automated vehicle identification
Integrated Dismissal System (Beeline)	Improves communication; integrates with school systems	Requires training and infrastructure; still staff-monitored
Geofencing (Car-Pool App)	Real-time arrival alerts; reduced manual check-ins	Dependent on GPS accuracy, mobile devices, and connectivity
GPS Check-In (IschoolRide)	Keeps students inside until arrival; reduces idle staging	Relies on parent app usage and accurate GPS; staff verification will still be needed

All alternatives improve organization but still rely on staff actions, limiting full automation.

System Level Functional Description - High-Level Block Diagram

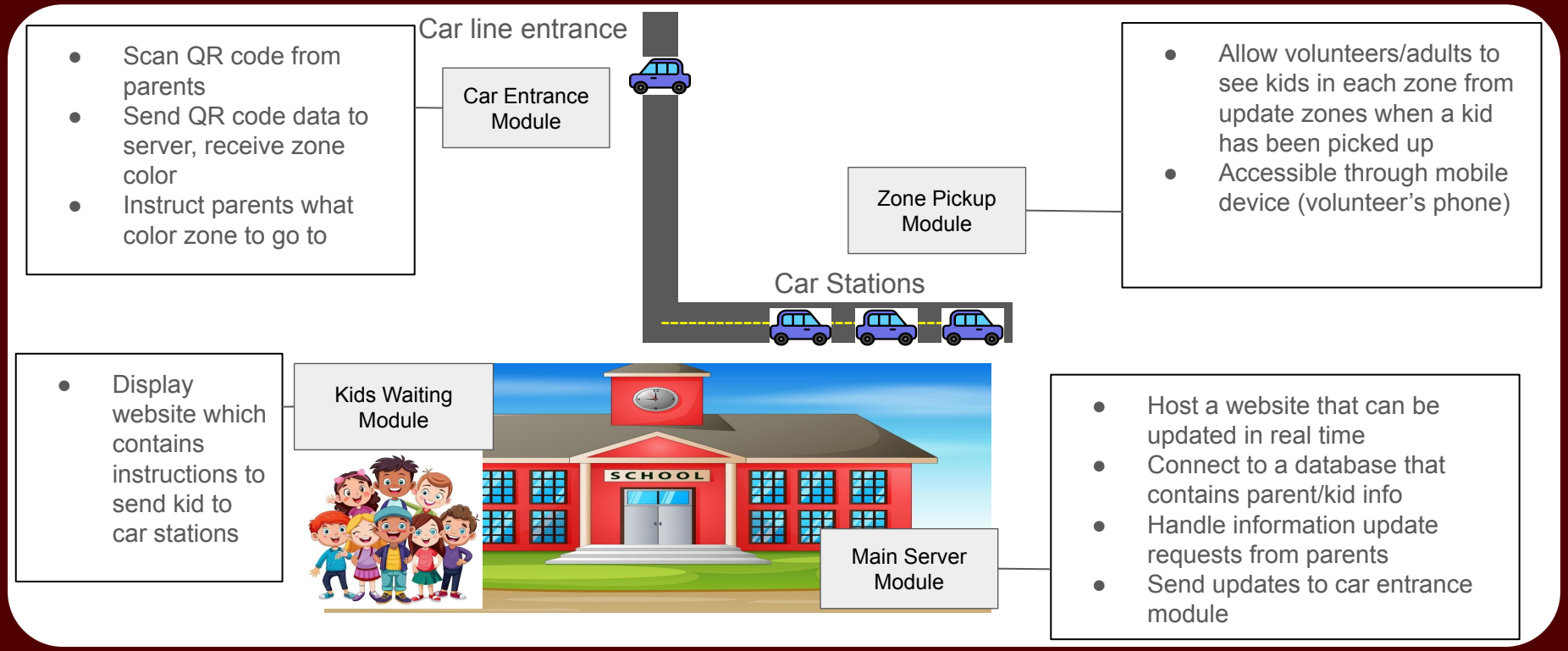

System Component - Car Entrance Module

Hardware:

- Microcontroller for processing and controlling devices
- Camera for images
- Display for instructing parents
- Rechargeable battery for power

Software:

- Image processing software
- Display instructions on screen
- Server communication software

Interfaces:

- Inputs:
  - Images
  - Zone color from server
- Outputs:
  - Display information to instruct parents
  - QR code data to server

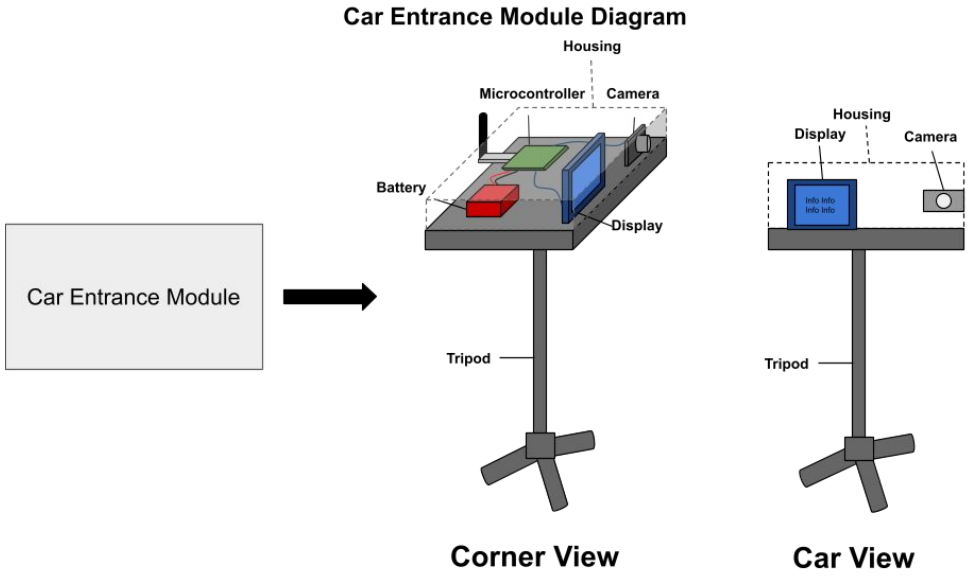

System Component - Car Entrance Module cont.

Car Entrance Module Design Progression:

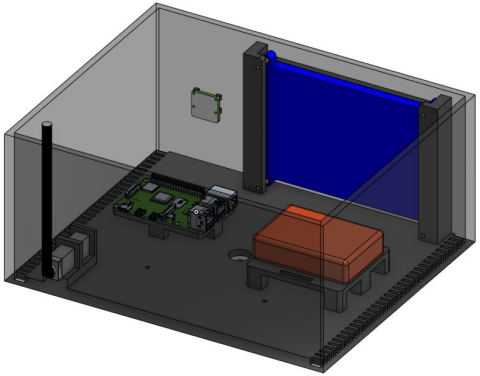

Initial Design

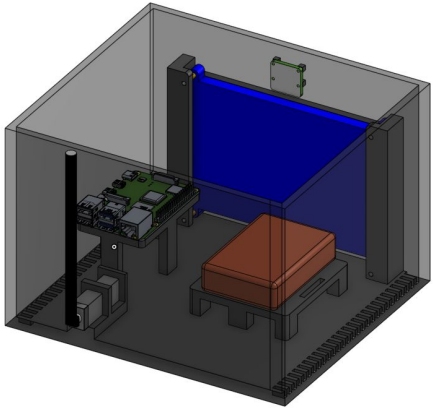

First Re-design

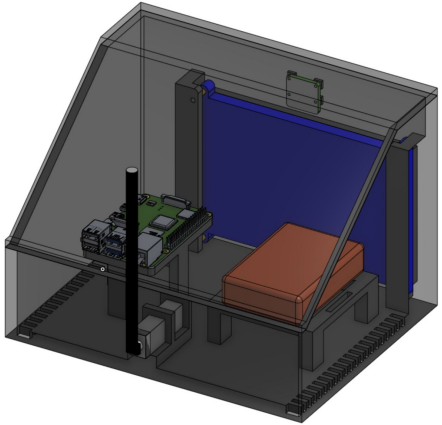

Final Design

System Component - Zone Pickup Module

Hardware:

- Mobile devices to display zone information

Software:

- Website access on devices

Interfaces:

- Inputs:
  - Button input on phones once a kid has been picked up
- Outputs:
  - Website for volunteers to see

Zone Pickup Module Diagram

System Component - Main Server Module

Hardware:

- Computer to run software

Software:

- Website hosting - needs real time updating
- Database connection to access and update parents/kids info
- Server - allow the website and microcontroller to communicate

Interfaces:

- Inputs:
  - QR code data
  - Parent requests (to update information)
- Outputs:
  - Information to update car entrance module display
  - Website

Main Server Module Diagram

System Component - Kids Waiting Module

Hardware:

- Large display (projector or large TV)

Software:

- Website access on screen

Interfaces:

- Inputs: None
- Outputs:
  - Website to instruct kids and staff when to send kid to zones to be picked up (also which zone to go to)

Kids Waiting Module Diagram

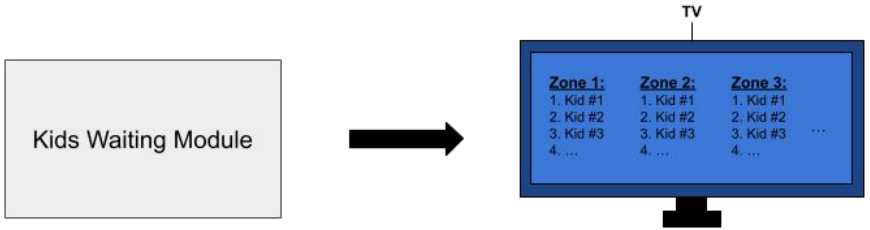

Budget Breakdown

Module	Component	Description	Qty	Unit Cost ($)	Total Cost ($)
Car Entrance	Tripod	Tripod to support car entrance module housing.	1	$22	$22
Car Entrance	Raspberry Pi	Microcontrollers to control car entrance and zone pickup modules.	1	$75	$75*
Car Entrance	Raspberry Pi Camera	Camera to use license plate recognition of cars.	1	$55	$55*
Car Entrance	10000mAh Rechargeable Battery	Batteries to give sufficient power to the car entrance and zone pickup module.	1	$40	$40
Car Entrance	7-inch display	Display to inform the parent of the car what zone to go to, and verify we have matched their car with their kid.	1	$38	$38*
Car Entrance	HDMI Cord	HDMI cord to connect the microcontroller to the display.	1	$4	$4
Car Entrance	3D printing	3D printed housings for car entrance and zone pickup modules.			$36.55**
Car Entrance	Mounting Screws	Screws to securely mount components to housings.	~40	$8 (600pcs)	$8
Total* (not including components provided)					**$74**
Total					**$278.55**

Budget Breakdown - cont.

Parts Purchased but Not Used:

Module	Component	Description	Qty	Unit Cost ($)	Total Cost ($)
Car Entrance	Zigbee Antenna	Antennas for wireless communication between car entrance and zone pickup module.	2	$27	$54***
Car Entrance	Wires	Wires to connect components.	~20	$10 (240pcs)	$10***
Total					**$64**

- Total Spent by us: $74 + $64 = **$138**

Evidence of Effective Teaming

Defined Roles and Responsibilities

Each team member is responsible for a specific subsystem:

- **Haya Abusada** – Frontend development and system integration
- **Sara Vorhaben** – Backend development and authentication
- **Jake Hewett** – Database architecture and administrative interface
- **Jack Uehlinger** – Hardware and camera integration
- **Jayden Pearson** – Mechanical design and enclosure development

This ensures **clear ownership of tasks and efficient development**.

Collaboration and Communication

The team maintains strong coordination through:

- **Weekly team meetings** to review progress and address issues
- **GitHub** for version control and collaborative development
- **Discord and Text** for daily communication and troubleshooting
- **Google Drive** for shared documentation and reports

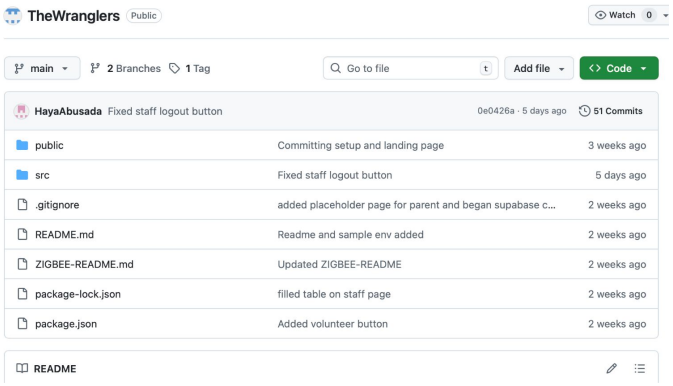

Screenshot of Github Repo

Evidence of Effective Teaming - Gantt Chart

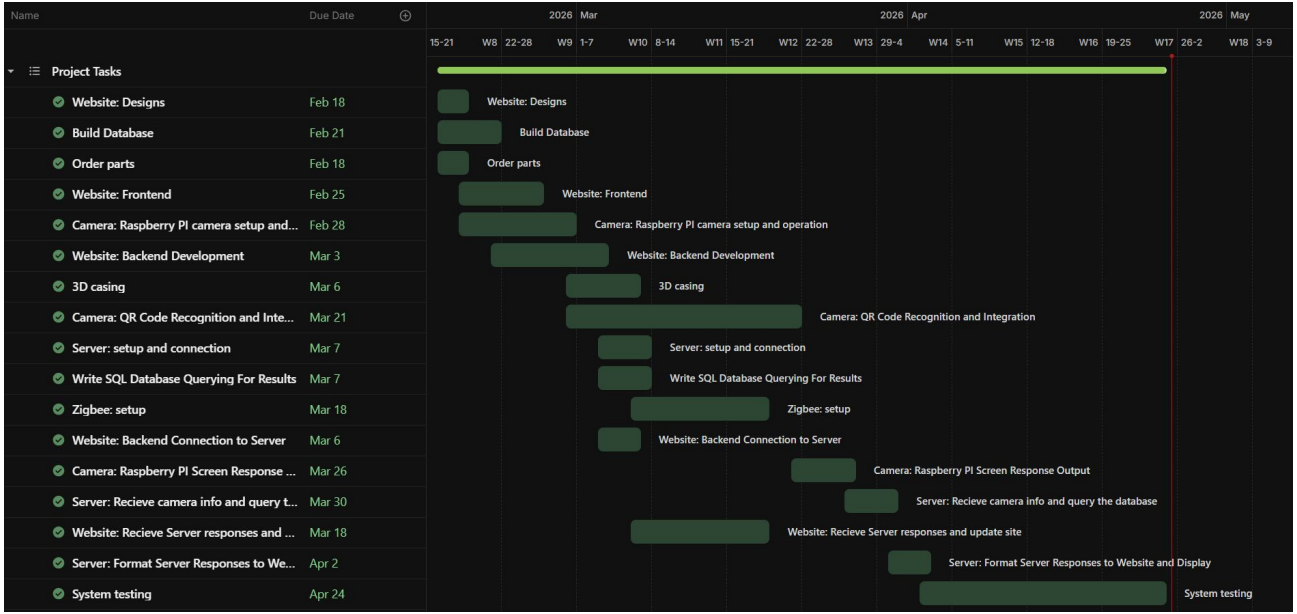

- Gantt Chart Shows all tasks completed
- Red line is today

Environmental, Health, and Safety Concerns

Environmental Impact

- Minimal hardware footprint (primarily existing devices like monitors and Raspberry Pi)
- Reduced vehicle idling time → lowers emissions during pickup
- Digital system reduces paper usage (no printed pickup lists)

Health Considerations

- Contactless QR code system reduces physical interaction
- Minimizes crowding and improves traffic flow for safer pickup conditions

Safety Considerations

- Clear, color-coded display reduces confusion for drivers
- Organized station system prevents congestion and accidents

Social, Political, and Ethical Concerns

- **Social Impact**
  - Improves efficiency and reduces wait times for families
  - Enhances safety for students during pickup
  - Accessible interface designed for non-technical users
- **Ethical Considerations**
  - Protection of personal data (student and parent information)
  - Use of secure authentication (Google OAuth)
  - Controlled access to staff-only features
- **Political / Regulatory Considerations**
  - Must comply with school policies and student privacy regulations (e.g., FERPA)
  - Requires proper authorization for data collection and usage
  - Deployment depends on school/district approval and infrastructure

Manufacturability, sustainability, and economics

Manufacturability

- Software-based system → easily deployable and scalable
- Uses widely available hardware (monitors, laptops, Raspberry Pi)
- No specialized manufacturing required

Sustainability

- Reduces fuel consumption through optimized pickup flow
- Digital-first approach minimizes material waste
- Scalable system reduces need for additional infrastructure

Economic Considerations

- Low implementation cost (open-source tools, cloud services)
- Minimal hardware investment
- Reduces labor inefficiencies and operational costs for schools

Our Final Product Video

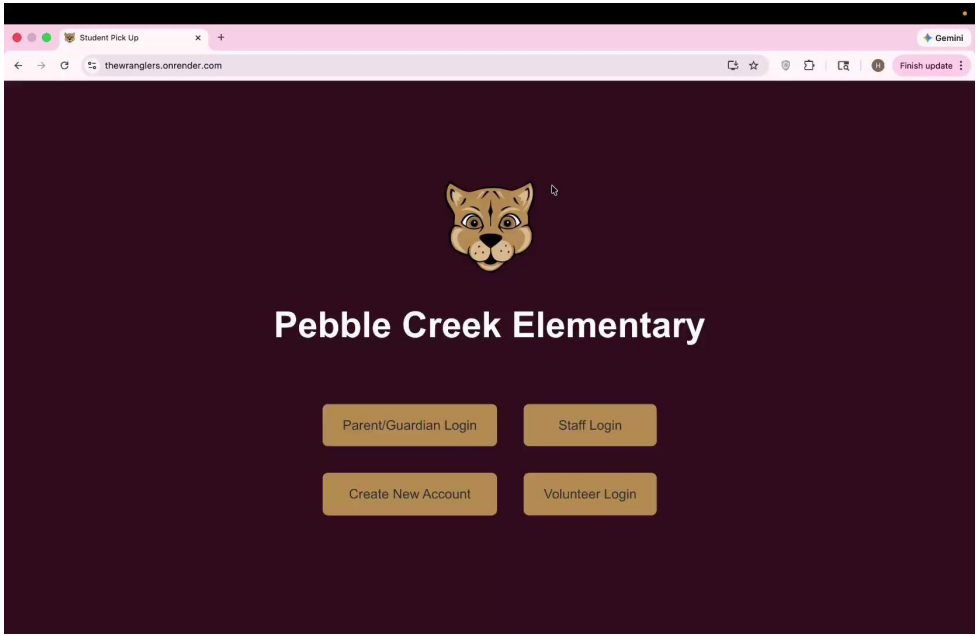

- Full System Test
  - Parent Creates an account
  - School Approves the account
  - Parent pulls up to the camera and scans QR code
  - At same time, inside school announces the pickup of students
  - Student then goes to the correct station, volunteer can check them off and they get to go home

Testing and Results

Small, foundational testing first

- Display text found by the camera directly to the screen it is connected to
- Ping router from the car entrance module to verify connectivity
- QUERY database to ensure proper initialization

System testing comes next

- Packets should be sent to the database, should return student names
- Screens directing drivers and students should update in no more than 5 seconds
- Web server flags incoming requests to alter database to admin page

Results

Database Implementation

- PostgreSQL database created using **Supabase**
- Tables implemented for:
  - Parent accounts
  - Student records
  - Parent–student relationships
  - Pickup status tracking
- System successfully **inserts, retrieves, and updates records**

Hardware

- **Raspberry Pi uses services to run program on startup**
- Display is connected to web server output
- System can **process images and detect QR codes**

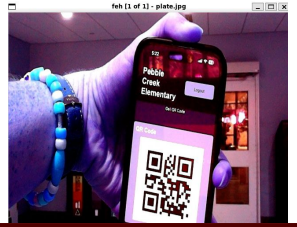

Mechanical Development

- 3D printed housing encloses all hardware components
- Housing also mounts directly to tripod

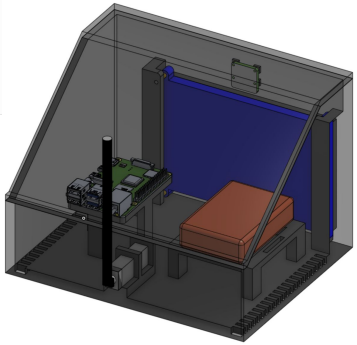

Results

Some of the Results for Testing Can be seen below:

Test	Time To complete
Time for Someone with no experience to create and account and add a child	44 Seconds
Time for Full system pickup (drive up, scan QR Code, Pull Forward)	1 minute and 3 seconds for 2 cars
Time to approve student	~2 seconds
Time to Generate Approved QR Code	Less than 1 second
Battery life of the Car Entrance Module	Greater than 2.5 hours
Time To Display Successful Result after QR Scan	~1 second

Limitations

Zigbee Antenna Integration Removed

- Initial plan included Zigbee communication between modules
- Incorrect hardware was ordered and could not be programmed in time
- System was redesigned to operate without Zigbee

License Plate Recognition Not Implemented

- Tested but found to be unreliable
- Performance varied significantly with lighting conditions, camera angle, and distance
- Risk of incorrect identification was too high for real-world use

Dependence on Network Connectivity

- System requires stable internet connection for real-time updates
- Performance may degrade with poor connectivity

Future Improvements

Improved Identification Methods

- Integrate more reliable computer vision models for license plate recognition
- Combine QR codes with automated recognition for redundancy

Real-Time Communication

- Replace polling with WebSockets or MQTT for instant updates
- Improve system responsiveness and scalability

Scalability and Deployment

- Support multiple schools or larger campuses
- Add admin tools for managing stations and users dynamically

External Power Button

- Current setup requires staff to lift lid and plug in battery
- An external power switch would improve usability

Questions?

Thanks for listening!

The Wranglers